RF CONNECTORS / BT43

RBTPC01R	DIMENSIONS	RBTJC01	DIMENSIONS
	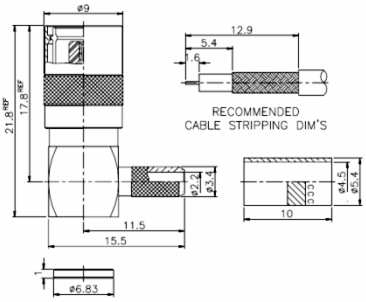		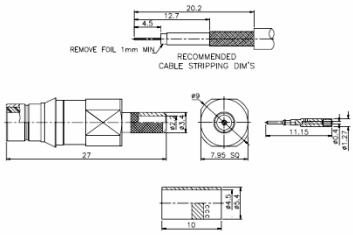
BT43 PLUG CRIMP RIGHT ANGLE		BT43 JACK CRIMP STRAIGHT	

RBTPC01	DIMENSIONS	RBTJM01	DIMENSIONS
	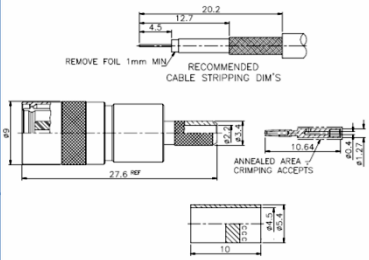		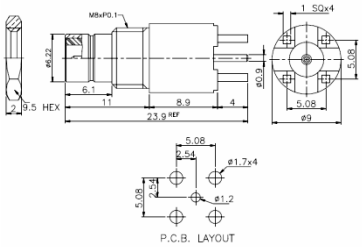
BT43 PLUG CRIMP STRAIGHT		BT43 JACK P.C.B. MOUNT BULKHEAD	

RABTP9BTPU	DIMENSIONS	RBTJM01R	DIMENSIONS
	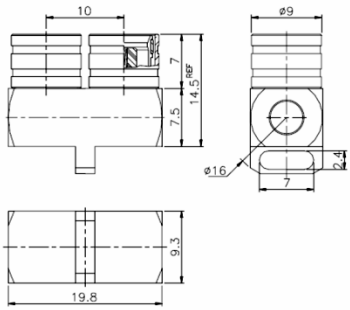		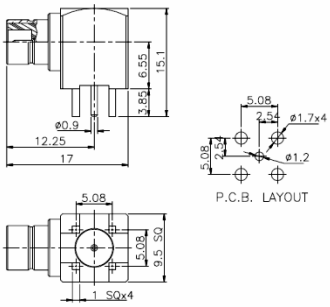
BT43 ADAPTOR PLUG TO PLUG U LINK		BT43 JACK P.C.B. MOUNT RIGHT ANGLE	